Instruction Manual

VB4-AM-S

Battery-operated Hydraulic Bending Tool

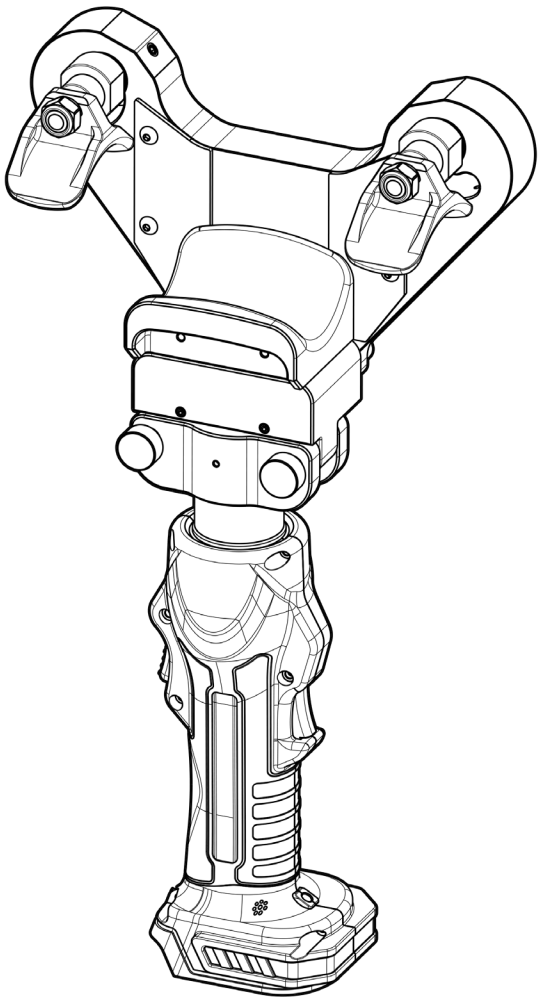

Holger Clasen
GmbH & Co. KG
Alsterdorfer Straße 228
22297 Hamburg,
Germany
Tel. +49 40 511 28-299
info@holger-clasen.de
holger-clasen.de

Serial No.

Original Instruction Manual

78004500

Content

1 General Information 3

2 General Safety Information 6

3 Product Description 9

4 Technical Data 14

5 Commissioning 15

6 Operation 17

7 Trouble-shooting 23

8 Maintenance and Service 24

9 Disposal 25

10 Declaration of Conformity 28

1 General Information

We hereby confirm that the tool described in this instruction manual complies with the basic safety and health requirements pursuant to the EC Machinery Directive 2006/42/EC, the EMC Directive 2014/30/EU and the RoHS Directive 2011/65/EU relating to electromagnetic compatibility.

Keep this instruction manual in a place that all users of the tool are familiar with and can access easily. Read this manual carefully before using, maintaining, repairing or disposing of the tool. Make sure that you clearly understand the instructions and symbols explained in this manual or attached to any tools.

You can prevent accidents by adhering to the following basic safety advice pursuant to the EC Machinery Directive 2006/42/EC and the regulations for hand-operated tools. In any case inform yourself about and comply with the accident prevention regulations applicable in your country.

Do not remove existing labels and stickers, especially those containing legally required information.

Upon receiving the tool, make sure that the packaging is intact, and the tool did not suffer any transportation damage.
In case of damage, please contact Technik Service Center at +49 40 511 28-202. Keep the packaging.

Symbols used:

 WARNING!

 Danger of hand injuries

 Please read instruction manual

 Please wear protective goggles

 Please wear protective shoes

 Please wear protective clothes.

 Don’t dispose of in residual waste

Manufacturer’s Warranty:

2-year warranty for proper use in accordance with a one-year period maintenance (at the latest after 10,000 work cycles), that have been carried out by the Technik Service Center. We reserve the right to rework the product at any time.

Legal Warranty

If operated correctly and if the required service intervals are adhered to, we grant a warranty of 24 months beginning as of the day of delivery unless legal regulations require other warranties.

Disclaimer of Warranty

The product is designed exclusively for the intended use described in this documentation. Provided that the technical specifications are complied with and the prescribed maintenance and servicing

measures are carried out, the product is intended for reliable continuous operation.

Safe operation requires compliance with all safety, operating, and maintenance instructions as well as with all applicable statutory regulations.

Any use other than the intended use, overloading, improper handling, failure to perform required maintenance, or unauthorized modifications may, to the extent permitted by law, result in the exclusion of liability and warranty claims.

The product is subject to natural wear and tear. Wear parts are therefore excluded from warranty and guarantee coverage unless a verifiable material or manufacturing defect can be demonstrated.

Label:



Year of Manufacturing – Serial Number: Head / Battery holder

BJ S/N (increasing number): e.g. 2026 031901

2 General Safety Information

⚠ WARNING

Danger due to overheating, breakage or electric shock of the battery.
The tool, the battery and the charger are matched components.

- ▶ This tool may only be operated with a suitable rechargeable battery.
- ▶ Charge the battery with the appropriate charger.
- ▶ Only use the original battery and charger.

Charge the battery in accordance with the instructions.

- ▶ Connect the charger to a power source with suitable power specifications.
- ▶ Do not use a DC or motor-driven generator.
- ▶ Unplug the charger after charging is complete.
- ▶ Do not use the charger in the rain.

Pay attention to the temperature of the battery, the charger and the environment.

- ▶ Do not charge the battery at temperatures below 0° or above +40° C.

Ensure sufficient ventilation of the battery during the charging process.

- ▶ Do not cover the battery and charger during charging.

Do not short-circuit the contact surfaces of the battery.
Failure to do so may result in bursting of the battery and leakage of hazardous materials.

- ▶ Secure the contact surfaces of the battery with the cover provided for this purpose.
- ▶ Do not store the battery without the cover together with metal parts such as nails, screws, etc.

Do not place the battery in a fire.
Failure to do so may result in bursting of the battery and leakage of hazardous materials.

Hydraulic fluid under pressure.
Escaping fluid under pressure can cause severe injury or death.

- ▶ If injure, seek medical attention immediately.

Danger due to electric shock.
The tool is not insulated in contact with electrically charged parts.
- ▶ Never work live strands / cables!
- ▶ When using the device on or near live wires, wear suitable personal protective equipment
- ▶ Do not touch the power plug or the battery with wet hands.

Exposed Work Area.
Danger of hand injury.
- ▶ Never reach into the running tool.

Influence by electromagnetic waves.
The functionality of pacemakers can be influenced by electromagnetic waves emitted.
- ▶ Keep the tool at least 15 cm or more away from the pacemaker.

Risk of injury to the hand.
Prevent the tool from starting up unintentionally
- ▶ Always move the blade to the starting position after use or before changing parts and remove the battery.
- ▶ Keep your fingers away from the trigger when transporting the tool.
- ▶ Secure the trigger.

Danger due to inhalation of dust.
Depending on work environment dust hazardous to health may be generated during machining.
- ▶ Wear a protective mask during dusty operation.

Danger of eye injuries
Material can fly around.
- ▶ Wear protective goggles. Normal goggles do not provide sufficient protection.

Danger to persons in the vicinity due to breakage.
During operation, overload/material fatigue can cause damage to the head. Parts flying around can cause injuries.
- ▶ Do not point the head of the tool at persons in your environment during operation.

Failure to observe the following instructions may result in property damage or accidents:

Use the tool within the scope of its intended use.
Do not overload the tool. Overloading can lead to blocking, excessive heat generation and ignition.

Keep handles and contact surfaces dry, clean and oil-free. Slippery surfaces reduce tool control and can lead to accidents in unexpected situations.

Refrain from any working method that could endanger safety.
Only use attachments and accessories for the work intended for them.
Do not make any modifications to the tool. Ensure a fatigue-free working position.

Remain attentive when working with high concentration.
Do not operate the tool if you are in poor physical condition.
Do not operate the tool under the influence of alcohol.
When using the device on or near live wires, wear suitable personal protective equipment.
Do not touch the power plug or the battery with wet hands.

3 Product Description

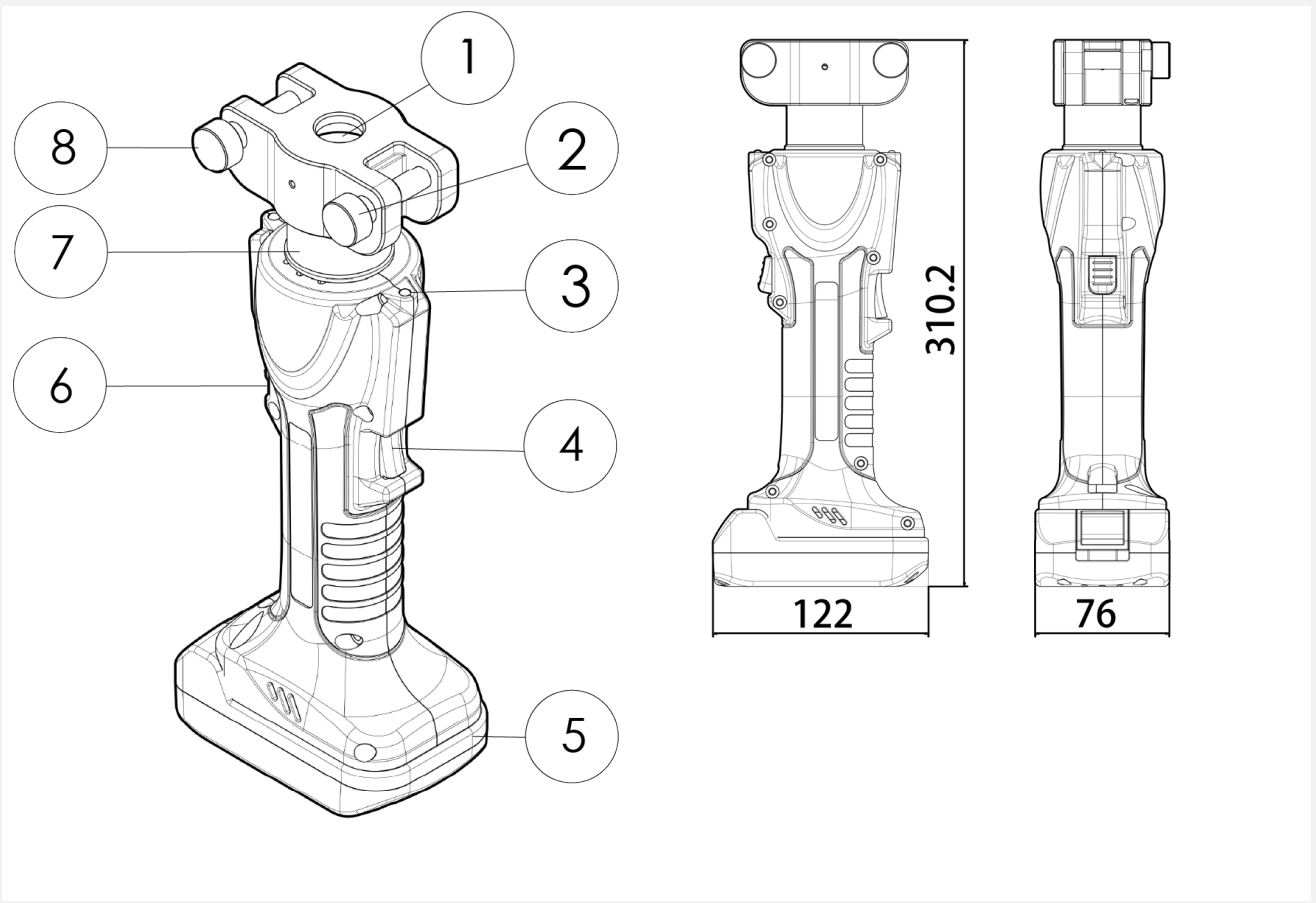

A1

A1: Description

1 Chuck Attachment
2 Locking
3 LED (Workfield Illumination / Function Control)
4 Forward Button
5 Battery (not included)
6 Return Button
7 Head, 180° rotatable
8 Locking

Attachments, battery and charger are not included.

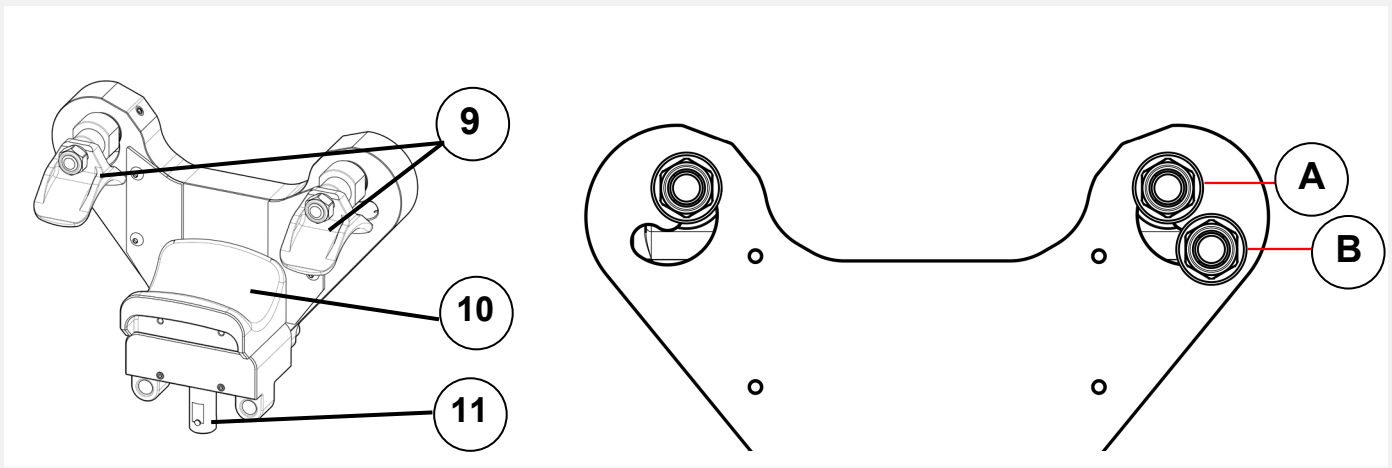

B1

B1: Bending head attachment MU-BH250

9	Adjusting Lever
10	Bending Rail
11	Piston

A	upper position (Al)
B	lower position (Cu)

3.1 Intended Use

This Battery-operated hydraulic bending tool has been designed for bending and straightening Cu- and Al-cable according to technical data.

For other applications, please contact Holger Clasen GmbH & Co. KG. The tool has been designed to be connected to an accumulator Makita, Li-Ion 18 V. We recommend 5.0 Ah capacity.

Although this tool has been designed according to the state-of-the-art and recognized safety requirements, its use may constitute a potential threat to the life and limbs of its user or third parties or damage the tool or other material assets.

Use or application for purposes other than those intended by the manufacturer will be considered improper. Holger Clasen GmbH & Co. KG will not be liable for damage resulting from improper use. The operator works at his own risk.

3.2 Expected Misuse

Do not operate the tool without inserted material/attached, locked attachment. This will damage and possibly break the head.

3.3 Qualification

This tool may only be used by qualified personnel who have read this safety advice and instruction manual.

3.4 Operator Protection



Danger due to chips flying around.
Wear protective goggles.
Standard glasses do not provide sufficient protection and are no proper substitution for safety eyewear.



Danger of drawing in of clothes and hair.
Wear protective clothes.
Loose or baggy clothes increase the risk of catching or winding on moving parts.
- Wear tight-fitting work clothing.
- Do not wear long hair open. Wear it well covered.
- Do not wear rings, chains or other jewellery.



Risk of crushing/sliding.
Wear protective shoes.
Make sure to stand firmly.

3.5 Workplace

Do not use the tool in environments where there is a risk of fire or explosion. Keep your workplace clean.

Keep children and unauthorized person away from your work environment. Ensure that there is sufficient lighting at the workplace.

Before switching on the tool, make sure that no one is endangered by the starting tool. Protect the tool from moisture, water, extreme heat / cold, chemical solutions and gases. Do not use the tool, the battery and the charger in the rain or in a wet environment or a wet environment. Do not charge the battery there either.

If the tool is colder than -5°C, store it for at least one hour temperature of +10 to +25°C for at least one hour to warm up the tool to room to warm up the tool to room temperature again.

Protect the battery tool from falls or impacts.

3.6 Temperature Range

If the tool is colder than -5°C, store it for at least one hour temperature of +10 to +25°C for at least one hour to warm up the tool to room to warm up the tool to room temperature again. Start the tool 5-10 times, or more frequently at low temperatures, until it is ready for operation.

3.7 Transport and Storage

Ensure dry storage to protect the tool from rust.
Clean the tool before / after use and before storage. Apply rust-proofing oil to the moving parts for longer storage periods.

Remove the battery from the tool before transporting or storing it. Secure the battery contacts and battery shaft with the covers provided.

If the tool is transported to another factory department or location, make sure that the tool and/or accessories are not damaged. Pack the tool accordingly.

Store the tool properly when not in use.
Store the tool in a place inaccessible to unauthorized persons.

Do not store the tool and battery in a place where the temperature may rise to +40°C or more (in a metal box, in a car in summer, etc.). Overheating may cause damage, smoke generation or ignition.

⚠ **Due to the high energy density of rechargeable batteries, there is a higher risk potential, especially when shipping used rechargeable batteries.**

One of the greatest risk factors when transporting rechargeable batteries or battery-powered devices is the danger of short circuits if the battery terminals meet other rechargeable batteries, metal objects or other conductive material.

If the battery is inserted in the tool, the battery terminals are secured.

If they are stored separately or shipped individually, secure storage must be ensured. A possible short circuit and damage to the connection terminals must be prevented. For this purpose, the battery terminals must be secured with a non-conductive material (e.g.

adhesive tape) or the contact protection cap. Batteries must be adequately protected against movement.

On the Makita website you will find recommendations for sending in lithium-ion batteries:

https://www.makitauk.com/data/pam/public/content-pages/support/battery-transportation/mb_36_shipping_lithium_ion_batteries.pdf

Special protective measures must be taken when shipping in airplanes or batteries over 100 Wh.

Notice IATA Packing instruction 965 Part 2 for lithium-ion-batteries. If package/battery is damaged, batteries must be quarantined, inspected and repacked.

Attention: Following the IATA Packing instructions the batteries are delivered on 30 % charge level. Please completely charge the battery before usage with the recommended battery charger.

Follow the Makita charger operating instructions (DC18RC):

https://www.makitauk.com/user-manuals

4 Technical Data

Item	VB4-BH250
Cutting Force	60 kN (6 tons)
Battery Voltage	DC 18 V Li-Ion Makita-kompatibel, 5.0 Ah capacity recommended
Performance (with 5 Ah)	Approx. 100 cycles
Weight*	5.9 kg (drive unit: 2.2 kg / Head: 3.7 kg)
Dimensions L x B x H*	453 x 250 x 120 mm
Head	180° rotatable
Shape	InLine
Hydraulic Oil	Equivis ZS 15
Item No. Set	78004500

* without battery

Scope of Delivery: Tool with attachment MU/-BH250, transportation case

Battery and charger have to be ordered separately.

Specifications

Bending	
Aluminium (class 1, 2)	**upper locking position** max. Ø 55 mm up to max. Ø 61 mm
Copper (class 1, 2)	**lower locking position** max. Ø 33 mm up to max. Ø 45 mm
Straightening	**Select a locking position that matches the cable**

Note:
Adjusting Levers have to be at the same height.
Failure to comply will result in damage to the bending head attachment

5 Commissioning



Fully charge the battery before using it for the first time.

Make sure that the accumulator is charged before each use.
The LEDs indicate the battery capacity.
To do this, press the test button on the battery.
Reload if necessary.

Observe the operating instructions for the Makita charger (DC18RC):

https://www.makita.de/bedienungsanleitungen.html

The following information is placed on the battery:

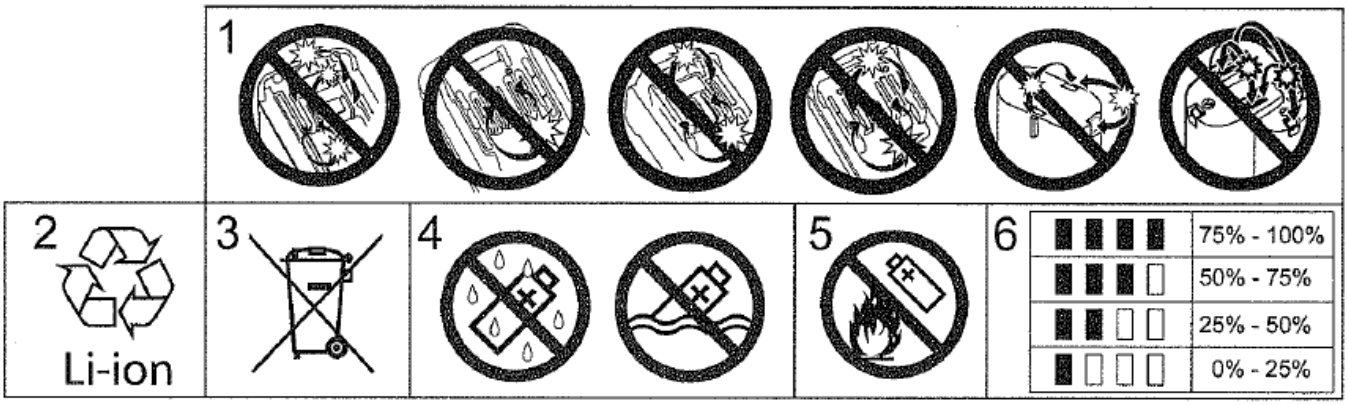

1. Do not short-circuit the battery
2. Always recycle used batteries.
3. Do not dispose of used batteries in household waste.
4. Do not expose the battery to water or rain
5. Do not throw the battery into fire
6. Battery charge level indicator:

■■■■	75 % - 100 %
■■■□	50 % - 75 %
■■□□	25 % - 50 %
■□□□	0 % - 25 %

Depending on the conditions of use and the ambient temperature, the indication may differ slightly from the actual capacity.

6 Operation

⚠ WARNING

Exposed Work Area.
Danger of hand injury.
- Never reach into the running tool.

Remove the battery from the tool before attachment-assembly, transporting or storing it. Otherwise, it may start unintentionally, discharge unintentionally and damage the tool.
Secure the battery contacts and the battery shaft of the tool with the cover caps provided.

For operational readiness, start at least 5-10 times in idle mode. Important: At temperatures below +10°C, start up more requently if necessary.

Never press the forward switch and the return switch simultaneously. This leads to a drop in performance/cut with less power.

Overheating of the motor is possible after continuous operation. Allow the tool to cool down in good time for a few minutes.

6.1. LED-Workplace Illumination

⚠ WARNING

Very bright light source.
Danger due to damage to the eyes during prolonged eye contact.
► Do not look directly into the LED.

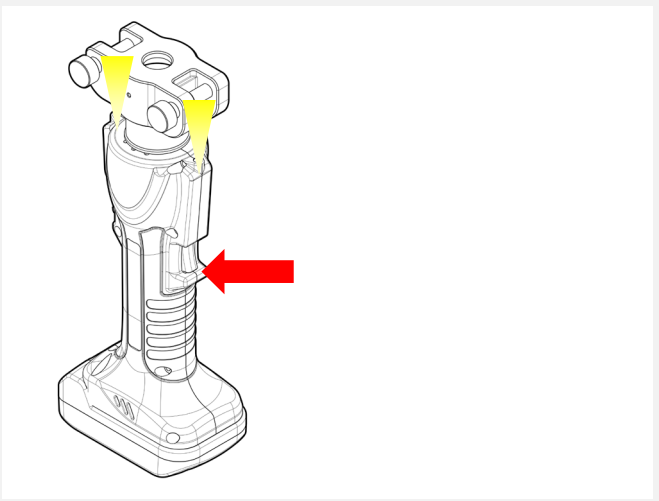

B1

B1: Switch on LED

Press the forward button (4). The LED (3) switches on.
It remains lit for 15–20 seconds after the switch is released.

6.2. Inserting / Removing the Battery

Press the test button on the battery to indicate the battery capacity.

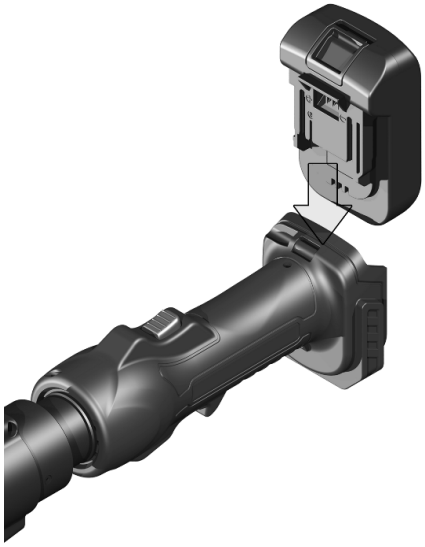

C1



C2

C1: Push the battery firmly into the battery holder of the tool.
C2: The locking button (5) must engage. Check that the battery is firmly engaged. The LED lights up for 15-20 s.



D1



D2

D1: Press the locking button. Press and hold the locking button.
D2: Pull the battery out of the tool.

Transport/Storage: Secure the battery contacts and the battery shaft of the tool with the cover caps.

6.3. Assembly Bending Head Attachment / Bending / Straightening

Check the bending head attachment / control buttons for function and damage. If there is obvious damage, do not put it into operation.

Pull the locking devices (2 + 8)out of the holder.
Insert the bending head attachment with the piston (11) into the holder (1).

Lock the bending head attachment with the two bolts.
Insert the bolts fully.

E1: Position Adjusting Levers

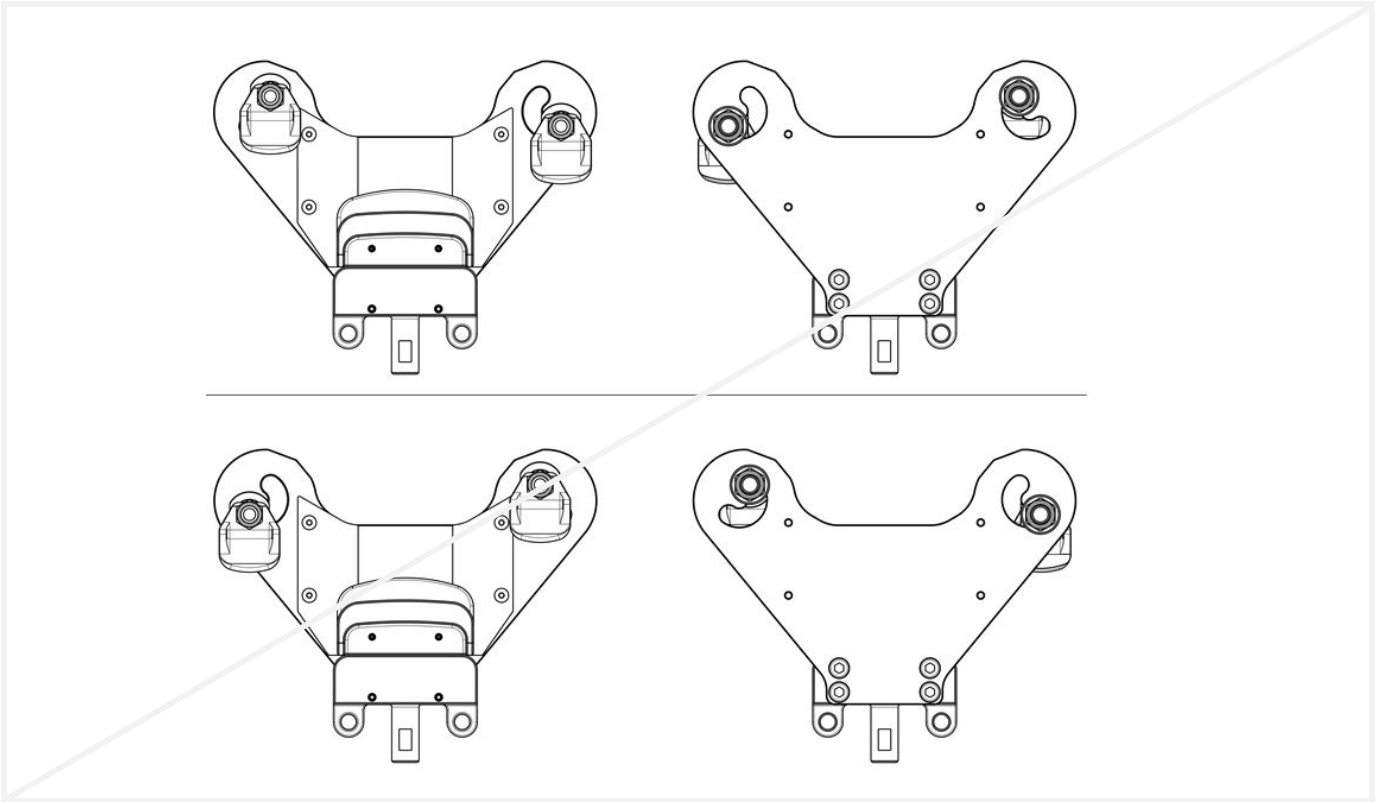

E1

NOTE: Adjusting Levers have to be at the same height.
Failure to comply will result in damage to the bending head attachment.

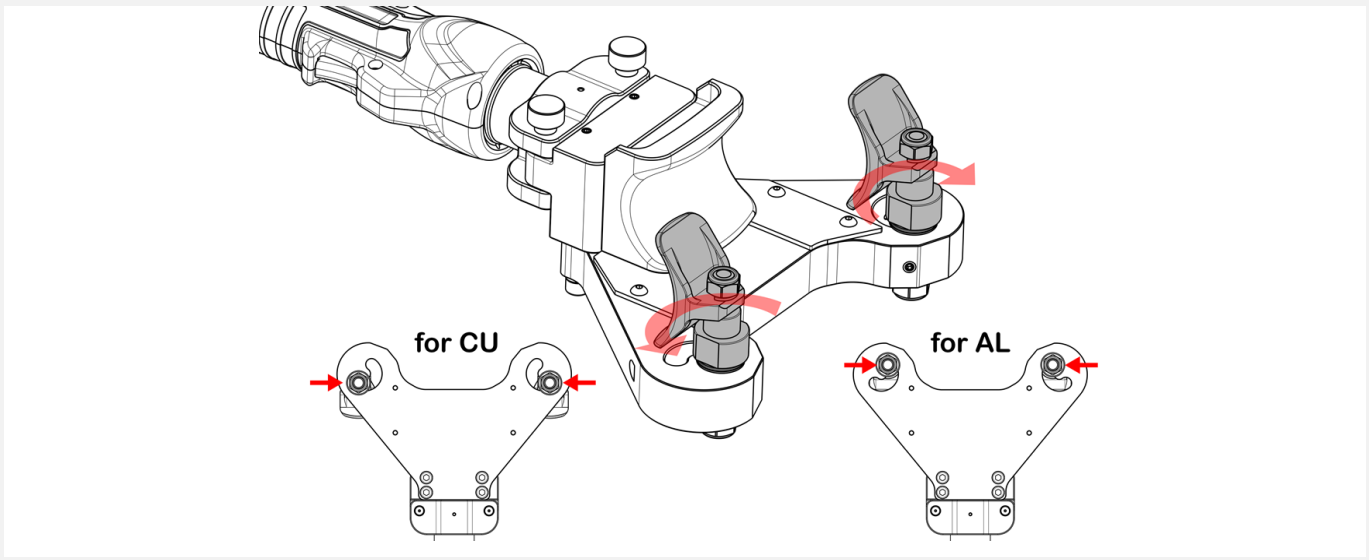

F1

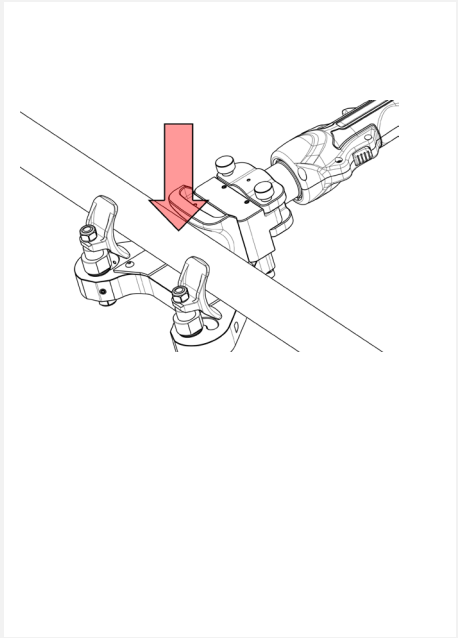

F2

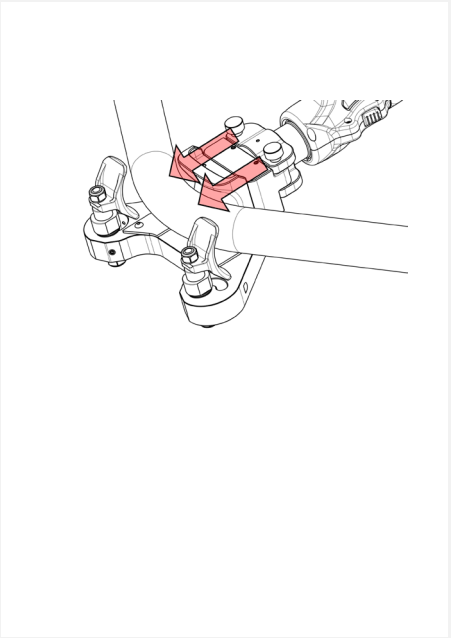

F3

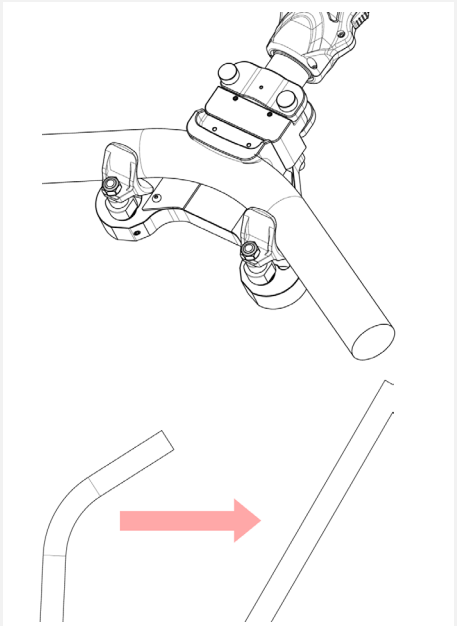

F4

F1: Positioning Adjusting Lever according to material (9)

Check that the material complies with the technical specifications.

Set the adjustment levers to suit the material:

- upper position: Aluminium (max. Ø 55 mm up to max. Ø 61 mm)
- lower position: Copper (max. Ø 33 mm up to max. Ø 45 mm)

F2+F3: Bending

Hold the cable between the open adjustment levers and the bending rail.

Press the feed switch (4).
You can stop the feed by releasing the feed switch.
The bending rail will hold in the desired position.

Move the bending rail back by pressing the return switch (6).

Adjust the cable in several stages until it has the desired shape.

Observe the minimum radii specified by the cable manufacturer.

F4: Straightening

Place the bent cable between the open adjustment levers and the bending rail.

Press the forward switch (4).
You can stop the forward movement by releasing the forward switch.
The bending rail remains in the desired position.

Retract the bending rail by pressing the reverse switch (6).

Adjust the cable in several stages until it has the desired shape.

7 Trouble-shooting

If the tool is colder than -5°C, store it for at least one hour in a room with a temperature of +10 to +25°C, in order to remove the tool to room temperature again. For operational readiness, start at least 5-10 times in idle mode. At temperatures below +10°C, start up more requently if necessary.

Error	Cause	Solution
The tool does not work.	Battery defect.	Replace the battery.
	Battery not charged.	Recharge the battery.
	Battery is inserted wrong.	Insert the battery correct.
	Battery contacts are dirty.	Clean the contacts.
	Fault in the hydraulic system (e.g. air)/valves.	Have the manufacturer inspect the tool.
Breakage Adjustment lever/ Bending Rail	Incorrect position of the adjustment levers.	Adjustment lever at the same height.
The head do not move to starting position	The head is dirty.	Remove chips and metal left on the movable parts.
	Wear of the return spring.	Have the manufacturer inspect the tool.
	Defect hydraulic system.	Have the manufacturer inspect the tool.
Material will not be cut.	Wrong application.	Check the application area.
	The material to be cut is excessively cold. *	Heat up the material to be cut.

* At temperatures below +10° C, the cutting properties of electrical conductors change. It is possible that cuts are not possible even if they are within the range of intended use.

8 Maintenance and Service

Task	Period	Maintenance by
Clean and grease movable parts. ►Use machine care oil **Not authorised: chemicals, water or wet clothes**	Daily	User
Inspection for damage and defects	Daily	User
Maintenance: ► Tool ► Operating pressure ► Hydraulic oil ► Blades	Every 12 months (latest after 10.000 work cycles)	Manufacturer



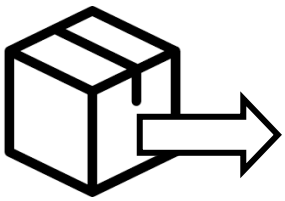

Technik Service Center
Alsterdorfer Straße 228
22297 Hamburg, Germany

Tel. +49 40 511 28-202
service@holger-clasen.de
holger-clasen.de

NOTICE

Only use the hydraulic oil Equivis ZS 15 or OEM Oil used by us.
The use of any other hydraulic oil may damage the tool or affect functionality.

9 Disposal



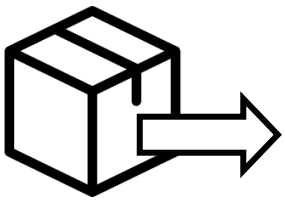

Holger Clasen GmbH & Co. KG
Alsterdorfer Straße 228
22297 Hamburg, Germany

Tel. +49 40 511 28-202
service@holger-clasen.de
holger-clasen.de

Do not dispose of the tool as a unit in residual waste.
Tool components can cause environmental damage!

Dispose of the tool in accordance with the scope of the European WEEE (2012/19/EU) and RoHS directives (2011/65/EU). Rechargeable batteries must be disposed of in accordance with the Battery Directive (2023/1542/EU).

Improper disposal is punishable under the Environmental Liability Act!

In accordance with §19 ElektroG, Holger Clasen GmbH & Co. KG offers the following options for returning old appliances:

1. send in the old appliance with clear notification for disposal to the following drop-off address: **Holger Clasen GmbH & Co. KG, Alsterdorfer Straße 228, 22297 Hamburg, Germany**.

2. personal delivery of the old appliance to the above address.

3. chargeable commissioning of Holger Clasen GmbH & Co. KG to collect the old appliance. The end user is responsible for the proper packaging of the old appliance.

The owner of the waste equipment is responsible for the disposal of personal data in physical or digital form prior to handover.

The owner of the old appliance is responsible for the non-destructive separation or appropriate packaging of old batteries and accumulators in accordance with Section 10 (1) ElektroG, unless they are enclosed by the old appliance.

The battery, the circuit boards and other components must be disposed of separately in accordance with the environmental standards in force in the European Union or in your country. Send the tool to Holger Clasen GmbH & Co. KG for disposal.

Do not dispose of battery pack together with household waste material! In observance of the European Directive 2006/66/EC, on batteries and accumulators and waste batteries and accumulators and the implementation in accordance with national laws, batteries and battery pack(s) that have reached the end of their life must be collected separately and returned to an environmentally compatible recycling facility.

10 Declaration of Conformity

VB4-BH250*

Akku-hydraulisches Biegewerkzeug VB4-AMS- mit Aufsatz MU-BH250
Battery-operated hydraulic Bending Tool VB4-AM-S with attachment MU-BH250

(D) CE-* - Konformitätserklärung. Wir erklären in alleiniger Verantwortlichkeit, dass dieses Produkt mit den folgenden Normen oder normativen Dokumenten übereinstimmt:

EN 62841-1, EN ISO 12100, EN 61000-6-4, EN 61000-6-2, gemäß den Bestimmungen der Richtlinien 2006/42/EG, 2014/30/EU, 2011/65/EU

(EN) CE-* - Declaration of conformity. We declare under our sole responsibility that this product is in conformity with the following standards or normative documents:

EN 62841-1, EN ISO 12100, EN 61000-6-4, EN 61000-6-2, in accordance with the regulations of directives 2006/42/EG, 2014/30/EU, 2011/65/EU

Hamburg, 11.09.2024

CE Lennart Clasen, CEO